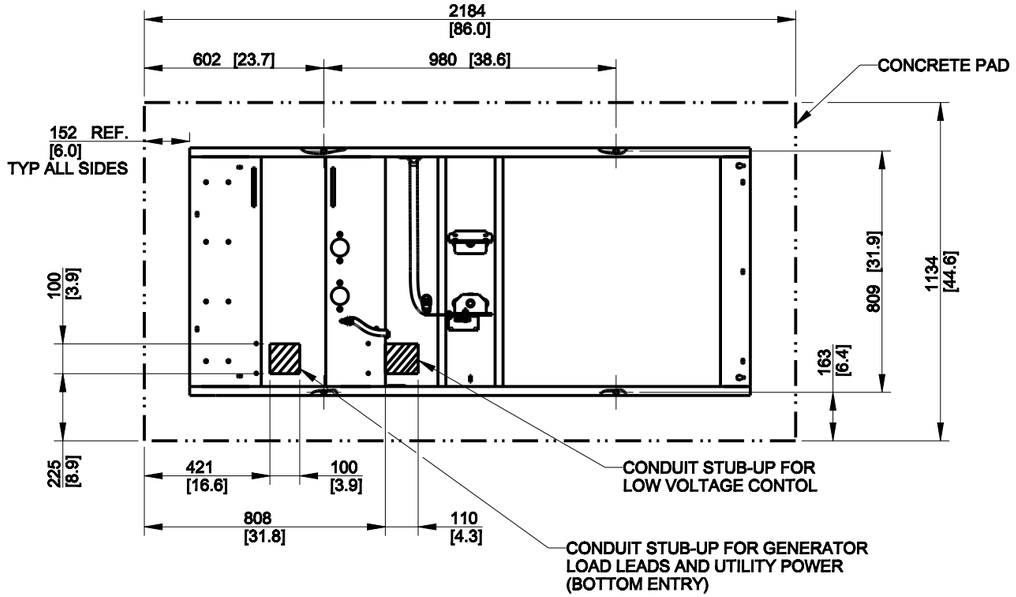

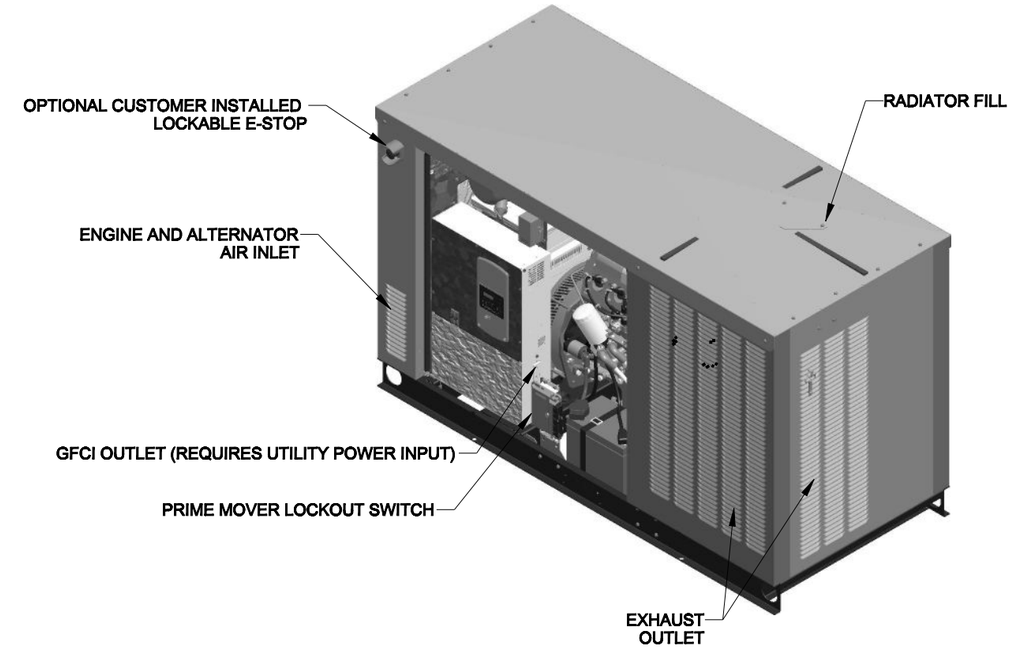

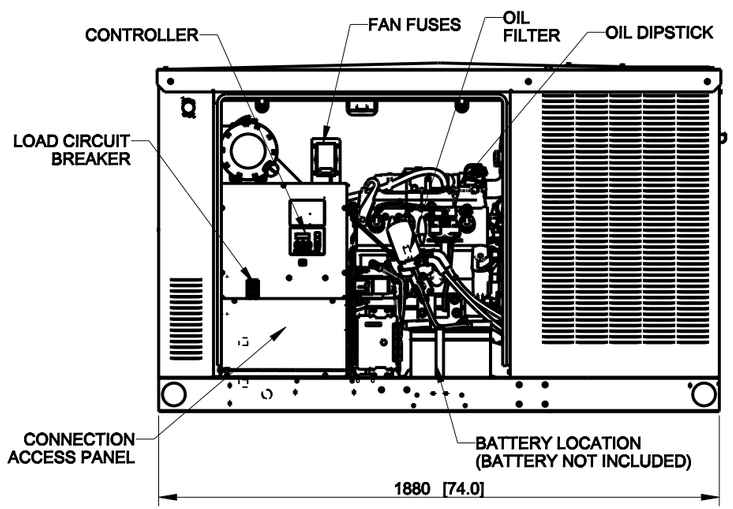

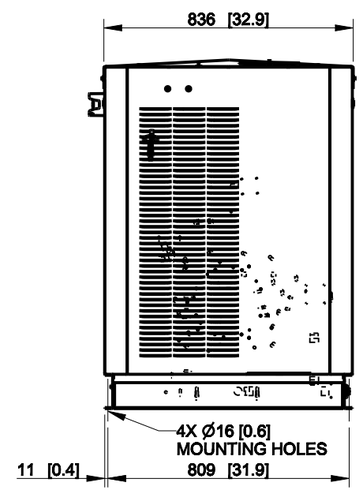

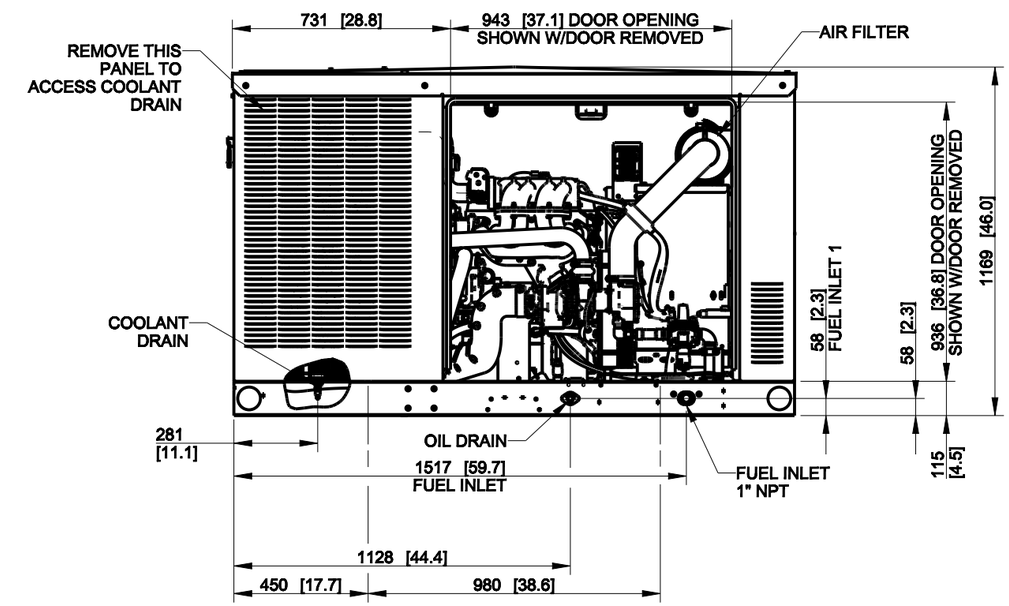

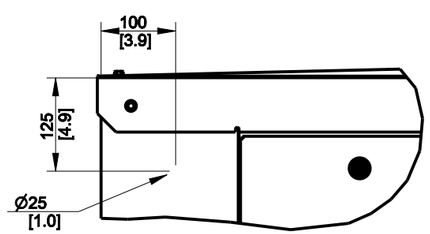

OPTIONAL E-STOP KIT LOCATION

NOTE:
DIMENSIONS IN [ ] ARE ENGLISH STANDARD EQUIVALENTS

REV	DATE	CHANGE NUMBER	ON COMPOSITE DWGS, SEE PART NO. FOR REVISION LEVEL ☐ INDICATES PART NUMBERS AFFECTED BY LATEST DRAWING REVISION	BY
A	23JUL2021	CT213532	(B-2) FUEL INLET 1 & 2 ADDED	RVM
B	29SEP2022	CT221726	SEE SHEET 2	AAS
C	02NOV2022	CT223403	(B-2) "FUEL INLET 2 1" NPT" REMOVED;	
			"FUEL INLET 1" NPT" WAS "FUEL INLET 1 1"	
			NPT"; (B-3) 1517 [59.7] WAS 1512 [59.5];	
			(A-1,A-5) "40RCL" REMOVED; (D-3, A-7)	
			OPTIONAL E-STOP KIT LOCATION & NOTE	
			ADDED; SEE SHEET 2	NCD

30RCLA
38RCLC

UNLESS OTHERWISE SPECIFIED:
ALL DIMENSIONS IN MILLIMETERS
GENERAL TOLERANCES:
X.XX ± 0.25
X.X ± 1.0
X ± 1.5
ANGLES ± 0°30'
SURFACE FINISH
MAX.

THIRD ANGLE PROJECTION

MAJOR ○ = 0
CRITICAL ◉ = 0
CHARACTERISTICS COMPLY WITH KPS-80022

DRAWN BY RVM
DATE:
APPROVED BY TAS
22JAN2021

DO NOT SCALE.
THIS ASSEMBLY OR PART MUST COMPLY WITH PEP-RML-001.
REFERENCE CAD MODEL FOR UNSPECIFIED DIMENSIONS.

KOHLER.
KOHLER, WISCONSIN 53044

SCALE: 0.050 | SHEET SIZE: B | SHEET 1 OF 2

TITLE:
DIMENSION PRINT, 30RCLA/38RCLC

DWG NO.: **ADV-9759**

THIS DRAWING IN DESIGN AND DETAIL IS KOHLER CO. PROPERTY AND MUST NOT BE USED EXCEPT IN CONNECTION WITH KOHLER CO. WORK. ALL RIGHTS OF DESIGN OR INVENTION ARE RESERVED.

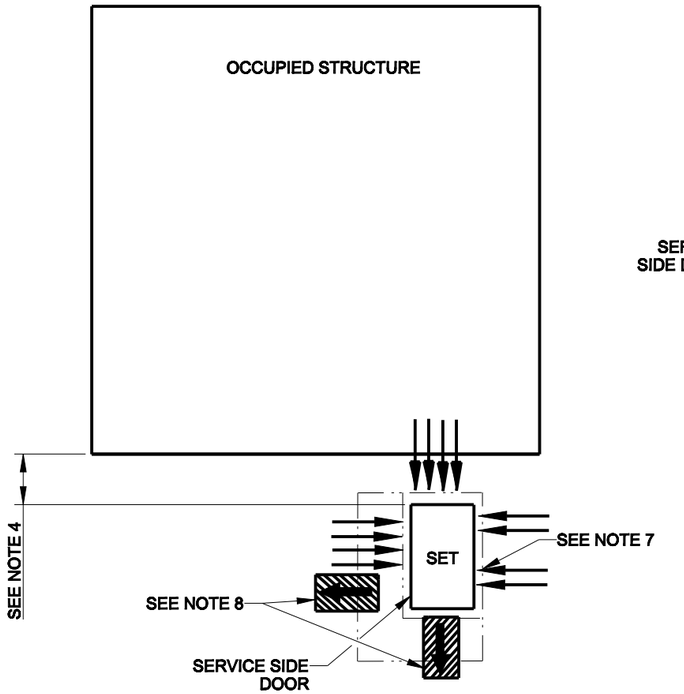

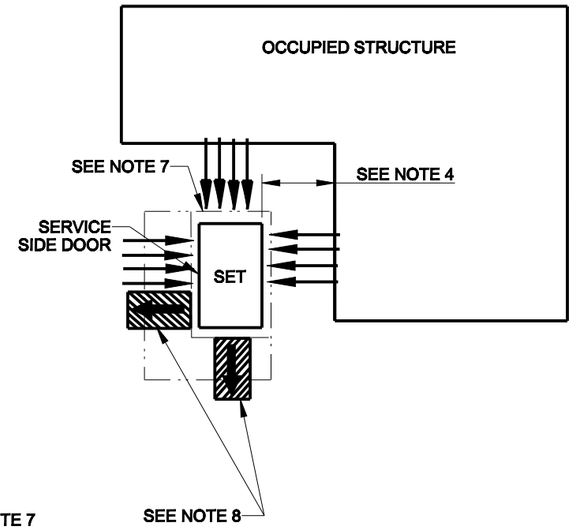

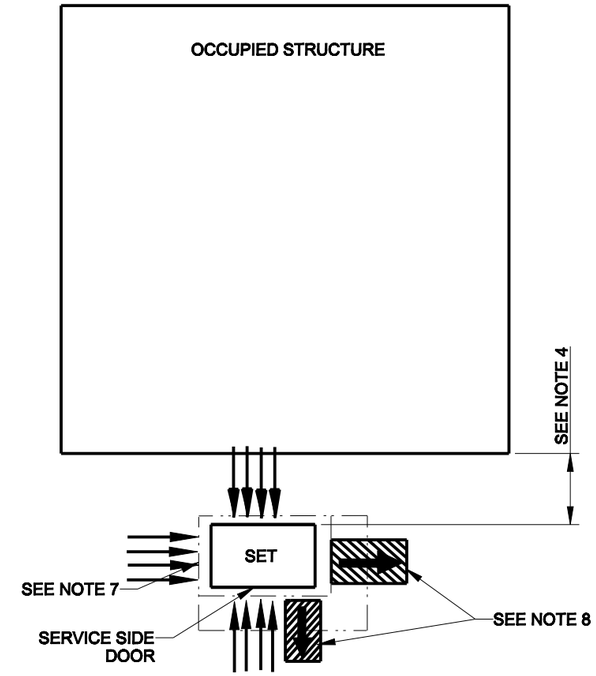

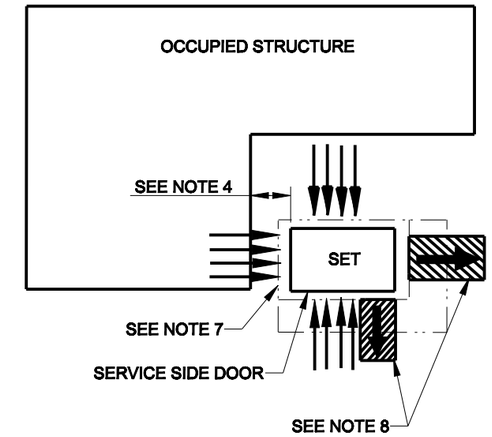

INSTALLATION GUIDELINES

1) EXHAUST IS AIMED AWAY FROM OR PARALLEL TO THE STRUCTURE.

2) EXHAUST IS NOT DIRECTED AT PLAY AREAS, PATIOS OR OTHER AREAS WHERE PEOPLE CONGREGATE.

3) THE NEAREST WINDOW, VENT, DOOR OR SIMILAR STRUCTURE OPENING IS AT LEAST 5 FEET FROM THE EXHAUST END OF THE GENERATOR.

4) GENERATOR SET MUST BE INSTALLED A MINIMUM OF 18 INCHES FROM STRUCTURE PER NFPA 37, HOWEVER, ACTUAL DISTANCE MAY DIFFER BASED ON STATE AND LOCAL CODES.

5) WINDOWS & DOORS ON ADJACENT WALLS ARE CLOSED.

6) FURNACE AND OTHER SIMILAR INTAKES ARE AT LEAST 10 FEET FROM EXHAUST END OF GENERATOR.

7) 4" THICK CONCRETE PAD EXTENDING 6" BEYOND GENSET ON ALL SIDES.

8) NO PLANTS, SHRUBS OR OTHER COMBUSTIBLES ALLOWED IN CLEARANCE AREA. (MINIMUM 4 FT. FROM EXHAUST END).

9) SENSITIVE PLANTS, PATIO FURNITURE, ETC. ARE AT LEAST 8 FEET FROM EXHAUST END OF SET.

10) REFER TO OWNERS MANUAL FOR OTHER INSTALLATION CONSTRAINTS.

11) RECOMMENDED SKID ANCHOR - 1/2" HILTI KWIK BOLT TZ CARBON STEEL WEDGE ANCHOR WITH STANDARD WASHER.

REV	DATE	CHANGE NUMBER	ON COMPOSITE DWGS, SEE PART NO. FOR REVISION LEVEL ☐ INDICATES PART NUMBERS AFFECTED BY LATEST DRAWING REVISION	BY
-	22JAN2021	CT209473	NEW DRAWING	RVM
A	23JUL2021	CT213532	SEE SHEET 1	RVM
B	29SEP2022	CT221726	(A-7) NOTE 8: 4FT WAS 8FT	AAS
C	02NOV2022	CT223403	(A-8) NOTE 11 ADDED; SEE SHEET 1	NCD

30RCLA
38RCLC

UNLESS OTHERWISE SPECIFIED:
ALL DIMENSIONS IN MILLIMETERS
GENERAL TOLERANCES:
X.XX ± 0.25
X.X ± 1.0
X ± 1.5
ANGLES ± 0°30'
SURFACE FINISH MAX.

THIRD ANGLE PROJECTION

MAJOR ○ = 0
CRITICAL ◉ = 0
CHARACTERISTICS COMPLY WITH KPS-80022

DRAWN BY RVM
DATE:
APPROVED BY TAS
22JAN2021

DO NOT SCALE.
THIS ASSEMBLY OR PART MUST COMPLY WITH PEP-RML-001.
REFERENCE CAD MODEL FOR UNSPECIFIED DIMENSIONS.

KOHLER.
KOHLER, WISCONSIN 53044

SCALE: 0.050 | SHEET SIZE: B | SHEET 2 OF 2

TITLE:
DIMENSION PRINT,
30RCLA/38RCLC

DWG NO.: ADV-9759

THIS DRAWING IN DESIGN AND DETAIL IS KOHLER CO. PROPERTY AND MUST NOT BE USED EXCEPT IN CONNECTION WITH KOHLER CO. WORK. ALL RIGHTS OF DESIGN OR INVENTION ARE RESERVED.